D45B PP, TD45B

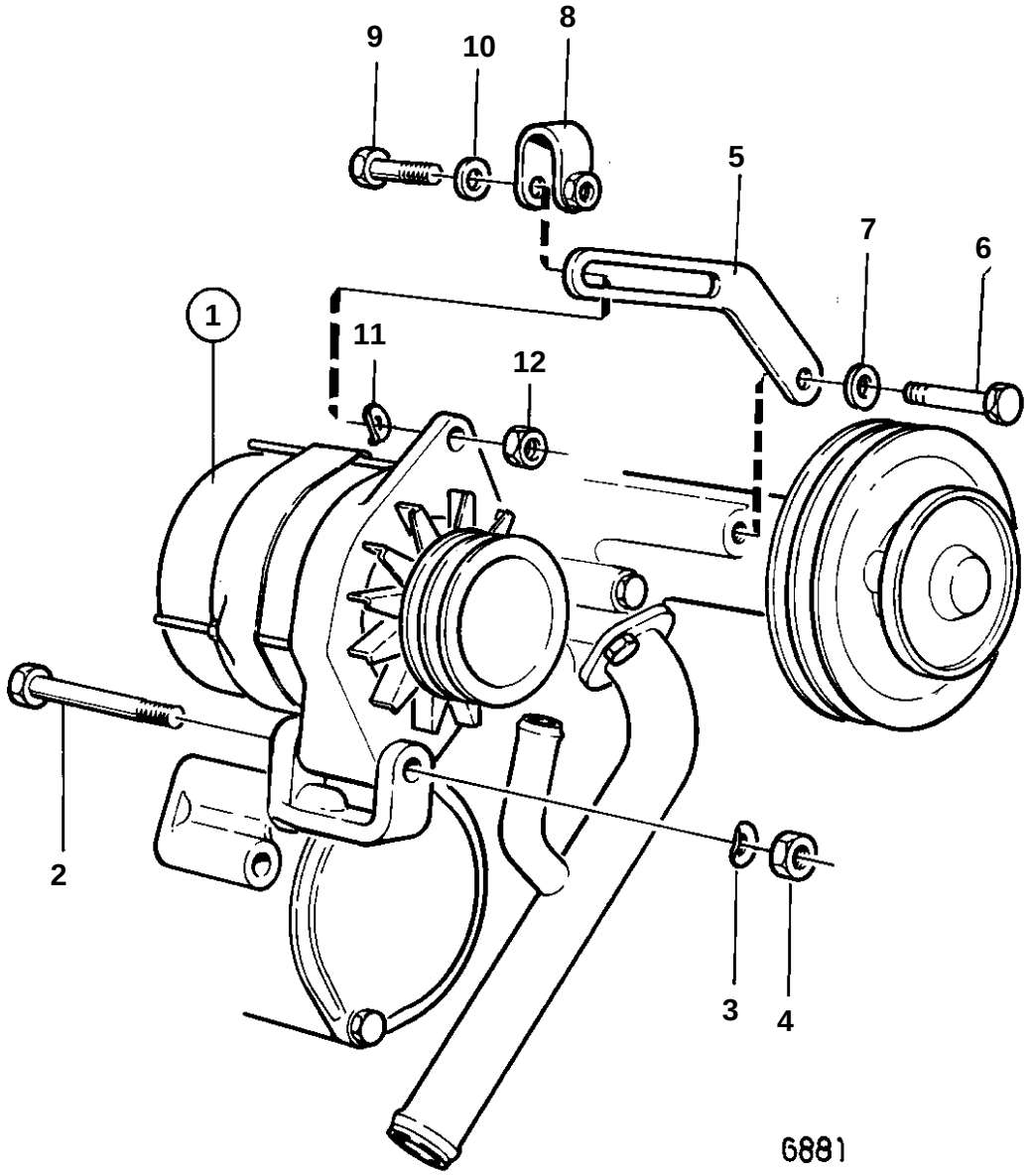

D45B PP, TD45B

REF	PART NO.	QTY	DESCRIPTION		SEE SEC.	NOTES
1	1502372	1	Alternator			28V 45A. REPLACED BY ALTERNATOR 4803545.. FOR 24 VOLTAGE ELECTRIC SYSTEM.
					030-0250	
	4803545	1	Alternator			28V 55A. FOR 24 VOLTAGE ELECTRIC SYSTEM.
			COMPS NOT SPEC.			MOXXXX/238488-
2	955556	1	Screw			
3	941909	2	Spring washer			
4	955836	1	Nut			
5	787028	1	Tensioner			
6	940114	1	Screw			
7	942336	1	Spring washer			
9	940186	1	Screw			
10	941907	1	Spring washer			
11	955894	1	Washer			
12	955826	1	Nut			